Date Opened: **25 October 2013**

Job #: **944**
Project: **Cargo Basket, RH**
Type: **Robinson R44**

Approval: **SH10-48**
Drawing List: **DCL906-12**

Fabrication and Assembly Drawing(s)	Description
90610, Rev. 0	Basket Ass'y
90611, Rev. 0	Basket Body Ass'y
90612, Rev. 0	Basket Lid Ass'y
84255, Rev. 0	Handle Installation
84261, Rev. 0	Handle Bar Ass'y
84262, Rev. 0	Handle Bracket Ass'y

Complete material tracking information on attached pages.

Work Order pre-completion Inspection:

Project is on Approval Limitation Record:	Y
Document Control List revision level matches (or exceeds) STC:	Y
Drawings revision levels match Document Control List:	Y
Purchase order or Work order source is recorded for each part/ass'y:	Y
Tests and inspections specifically called out on drawings are complete:	Y
Release tags associated with all fabricated parts are attached:	Y
All mounting hardware and supplies are included:	Y

List all non-conformities raised:_____

Inspector Signature: Date:

Drawing: **90610** **Revision 0**
Assembly: **90610-01** **Cargo Basket Ass'y (Quick-Release)**

Qty Per	Part #	Description	Material	P.O./W.O.	Checked
7 Total	90610-01-02	LH Cargo Basket Assembly			
. 1	90611-01	Basket Body Assembly	Below		
. 1	90612-01	Basket Lid Assembly	Below		
. 1	84255-01	Handle Bar Installation	Below		
. 1	36280-01	Brace Assembly	9-2081 Brace	WO2013-01	
. 1	MS20001P4	Piano Hinge		12066	
. 1	90627-01	Placard	0.063" Sheet, 6061-T6 Aluminum	11102	
. 3	49205-14	Bumper	Argus Industries Bumper	11010	
. A/R	CR3213-5-02	Blind Rivet		12055	
. 8	CR3523-5-02	Monel Blind Rivet		12087	
. 4	CR3213-4-02	Blind Rivet		12032	
. 3	40088-14	Fitting	Ancra	WO2012-44	
. 3	AN960-616	Washer		12052	
. 1	90628-01	Fitting		11105	
. 1	AN3-15A	Bolt		12052	
. 1	AN3-17A	Bolt		12052	
. 4	AN960-10	Washer		12067	
. 2	AN970-3	Washer		12032	
. 2	MS21044N3	Nut		12032	

Processes	Per	Mat'ls Used	Inspection	Signature
Riveting	AC43.13-1B	HR3213-5-02, HR3523-5-02 Rivets		
Final Inspection	Drawing 90610			

Tag incomplete parts with Work Order # when stored between processes.

Tag complete parts / assemblies with Release Tag prior to storage.

Drawing: **90611** **Revision 0**
Assembly: **90611-01** **Basket Body Ass'y (Quick-Release)**

Qty Per	Part #	Description	Material	P.O./W.O.	Checked
7 Total	90611-01-02	LH Basket Body Assembly			
. 1	90621-01-02	LH Aft Attachment Hoop			
. . 2	90621-04	Lug	1018 Mild Steel, 5/8" Rod	12056	
. . 1	--	Tube	4130 Steel, ½" x 0.035 Sqr. Tube	12123	
. . 1	--	Tube	4130 Steel, 1" x 0.065 Sqr. Tube	12045	
. 1	90622-01-02	LH Forward Attachment Hoop	4130 Steel, ½" x 0.035 Sqr. Tube	12123	
. . 2	69823-02	Lug	1018 Mild Steel, 5/8" Rod	12056	
. 3	49210-02	Hoop	4130 Steel, ½" x 0.035 Sqr. Tube	12123	
. A/R	--	Tube	4130 Steel, ½" x 0.035 Sqr. Tube	12123	
. A/R	--	Tube	4130 Steel, ¾" x 0.035 Sqr. Tube	12123	
. 1	84262-01	Handle Bracket Assembly	Below		
. 1	49215-01	Spacer	1018 Steel, ½" Rod	12056	
. A/R	¾-16F	Mesh	Expanded carbon steel	12065	

Processes	Per	Mat'ls Used	Inspection	Signature
Welding	AMS 2685C	Welding Rod ER70S-2		
Powder Coat	Drawing 90611			
Final Inspection	Drawing 90611			

Tag incomplete parts with Work Order # when stored between processes.

Tag complete parts / assemblies with Release Tag prior to storage.

Drawing: **90612** **Revision 0**
Assembly: **90612-01** **Basket Lid Ass'y (Quick-Release)**

Qty Per	Part #	Description	Material	P.O./W.O.	Checked
7 Total	90612-01-02	RH Basket Lid Assembly			
. A/R	--	Tube	4130 Steel, ¾" x 0.035 Sqr. Tube	12123	
. 1	49216-01	Spacer	1018 Steel, ½" Rod	12056	
. 1	84262-01	Upper Handle Bracket Assembly	Below		
. 1	36204-10	Placard Bracket	1018 Steel, 0.035" Sheet	9010	
. A/R	¾-16F	Mesh	Expanded carbon steel	12065	

Processes	Per	Mat'ls Used	Inspection	Signature
Welding	AMS 2685C	Welding Rod ER70S-2		
Powder Coat	Drawing 90612			
Final Inspection	Drawing 90612			

Tag incomplete parts with Work Order # when stored between processes.

Tag complete parts / assemblies with Release Tag prior to storage.

Drawing: **84255** **Revision 1**
Assembly: **84255-01** **Handle Installation**

Qty Per	Part #	Description	Material	P.O./W.O.	Checked
7 Total	84255-01	Handle Installation			
. 1	84261-01	Handle Bar Assembly	Below		
. 2	84267-01	Bracket	Delrin, ¾" Sheet	WO2012-15	
. 2	36278-01	Spring (1 left, 1 right)	304 Stainless, 1/16" Dia Music Wire	12033	
. 2	36275-01	Bushing	SAE 660 Bronze, 5/16" Dia	11030	
. 2	AN3-14A	Bolt		12032	
. 4	AN3-11A	Bolt		12032	
. 12	AN960-10	Washer		12067	
. 6	MS21044N3	Nut		12032	

Processes	Per	Mat'ls Used	Inspection	Signature
Final Inspection	Drawing 84255			

Tag incomplete parts with Work Order # when stored between processes.

Tag complete parts / assemblies with Release Tag prior to storage.

Drawing: **84261** **Revision 1**
Assembly: **84261-01** **Handle Bar Assembly**

Qty Per	Part #	Description	Material	P.O./W.O.	Checked
7 Total	36261-01	Handle Bar Assembly			
. 1	36277-01	Handle Bar	316 Stainless, 1.0 x 0.035 Rnd. Tube	12093	
. 2	84265-01	Lever	304 Stainless, 0.105 Sheet	10036	
. 2	36274-01	Bushing	304 Stainless, 7/16" x 0.065 Rnd. Tube	11057	
. 2	MS20615-4M3	Monel Rivet		7039	

Processes	Per	Mat'ls Used	Inspection	Signature
Welding	AMS 2685C	Welding Rod ER308L		
Final Inspection	Drawing 84261			

Tag incomplete parts with Work Order # when stored between processes.

Tag complete parts / assemblies with Release Tag prior to storage.

2013-47
R44 RH

CARGO BASKET LID FABRICATION - COMMON

General

These instructions apply to all cargo basket lid assemblies. Refer to the following drawings, at the current revision, for dimensions and details:

Bell 206L/407 – Right side only
69812, Revision 3 – Standard Low Mounted Basket; Extra-Wide Low Mounted Basket
94612, Revision 0 – Extra-Wide Low Mounted Ski Basket
76612, Revision 0 – High Mounted Ski Basket

Eurocopter AS350/AS355 – left or right
77612, Revision 1 – Short Basket
69812, Revision 3 – Medium Basket (left and right)
78412, Revision 2 – Long Basket
94012, Revision 0 – Extra Large (ski) Basket

Robinson R44 – left or right
90612, Revision 0 – Standard Basket (left or right)

Bell 206B – right side only
80212, Revision 0 – Short Basket
80312, Revision 0 – Medium Basket
81112, Revision 0 – Long Basket

Bell 429 – right or left
95912, Revision 0 – Standard Basket

Bell Medium – left or right
75112, Revision 0 – Standard Basket
95512, Revision 0 – Extra Large (ski) Basket

MD600
82812, Revision 0 – Standard Basket

Options
70405, Revision 3 – Walkway
70402, Revision 1 – Lid Door

CARGO BASKET LID FABRICATION

Complete
(initial or SCA #)

Work Order: 2013-47

Date Open: _____

1. Rim Assembly – Basket Lid ADOG
    a. Cut and fit ¾" x 0.035 material to fit rim jig, 45 degree ends.
        i. 1 or 2 lid prop bushing holes in short tube – refer to drawing
    b. Record material PO on attached material list.
    c. Remove writing on tubes with acetone and scotch bright.

2. Weld Rim Assembly AD-05
    a. Record welding rod PO on attached material list.

3. Inspection ADOG
    a. Rim for complete welds

4. Frame assembly – Lid ADOG
    a. General
        i. Vent holes shall be #30 (0.129), and located inside the structure wherever possible to allow venting of weld gasses through existing holes (i.e. lid prop bushing)
    b. Insert rim from step 2 into jig.
    c. Cut and fit ¾" x 0.035 material, 21" long, for lid cross members.
    d. Record material PO on attached material list.
    e. Remove writing on tubes with acetone and scotch bright.
    f. Drill vent holes into rim to vent cross members into rim.
    g. Locate cross members in lid rim. Refer to drawing for spacing of cross members. Clamp cross members with C-clamps to jig.

5. Frame assembly – Lid with optional walkway modification ADOG
    a. Fit cross members to rim in accordance with step 4.
    b. Attach walkway jig with C-clamps. Ensure correct orientation of rim, refer to drawing.
    c. Cut ½" x 0.035 material for walkway stringers to fit between lid cross members. Record material PO on attached material list.
    d. Drill vent holes into cross members at walkway stingers.
    e. Align walkway stringers on walkway jig using cleco clamps near both ends of each stringer, and clamp stringer to jig using a C-clamp in the centre.

6. Weld frame assembly. AD-05
    a. Record welding rod PO on attached material list.
    b. Jigs must remain in place for as long as practical during welding.

7. Inspection ADOG
    a. Frame assembly for complete welds.

CARGO BASKET LID FABRICATION

Complete
(initial or SCA #)

8. Mesh assembly. AD06
   Note: 95912 (Bell 429) does not have mesh. Skip to step 10.
   a. Pull sheet of expanded mesh from stock. Record material PO on attached material list.
   b. Cut mesh to size for lid.
   c. Remove surface rust with scotch-brite.
   d. Ensure lid is prepared for mesh on the correct side.

9. Weld mesh to frame assembly per drawing. AD-05
   a. General welding requirements for all lids:
      i. Every intersection on all edges.
      ii. First 5 intersections along cross members, then every second intersection.
   b. MIG weld both short sides.
   c. Clamp lid over spacer at centre of lid to pre-tension mesh.
      i. ¾" for lids under 76"
      ii. 1" (check) for lids over 76"
   d. Weld remainder of mesh as indicated in a.
   e. Record welding rod PO on attached material list.

10. Weld lid components. AD-05
    a. Handle brackets, locate in accordance with drawing.
       i. Standard location: ¼" outside of last cross member on both ends.
       ii. Record handle bracket WO and welding rod PO on attached material list.
    b. Lid prop bushing(s).
       i. one or two in accordance with drawing.
       ii. Record lip prop bushing WO and welding rod PO on attached material list.
    c. Placard bracket. – not installed on 95912 (Bell 429)
       i. Locate on cross member to set bracket in centre bay of lid.
       ii. Record placard bracket WO and welding rod PO on attached material list.

11. Clean up AD06
    a. Grind high spots off mesh welds.
    b. Tighten mesh using special pliers. Tighten enough to remove "oil canning", where mesh springs in or out.
    c. Straighten lid using frame attached under welding table. Work carefully, avoid excessive force to prevent kinking rim tubes.
    d. Drill #9 through lid prop bushing(s). De-burr hole(s).
    e. Drill for lid bumpers using 1/4" (#3) centre drill.
       i. 3 places for lids under 76"
       ii. 4 places for lids over 76"
    f. Remove surface rust with scotch-brite pad.

12. Final Inspection
    To be completed by a different person than the previous steps. _____
    a. Basket lid assembly for complete welds, and required minimum mesh weld locations.
    b. Material lists complete.
    c. Overall condition and conformity to drawing(s).

Complete
(initial or SCA #)

13. Powder Coating — AJOC
    a. Parts are to be powder coated white in accordance with commercial practices.
    b. Record powder coating PO.
    c. Inspect powder coating on receiving.
    d. Tag lid assembly and place into stock in preparation for assembly.

2013-47

R44 RH

CARGO BASKET BODY FABRICATION - COMMON

General

These instructions apply to all cargo basket body assemblies. Refer to the following drawings, at the current revision, for dimensions and details:

Bell 206L/407 – Right side only
69811, Revision 3 – Standard Low Mounted Basket
94511, Revision 0 – Extra-Wide Low Mounted Basket
94611, Revision 0 – Extra-Wide Low Mounted Ski Basket
76611, Revision 0 – High Mounted Ski Basket
Options 70404, Revision 2 – Front end cutout – 698
70411, Revision 0 – Front end cutout – 945/946

Eurocopter AS350/AS355 – left or right
77611, Revision 1 – Short Basket
76411, Revision 3 – Medium Basket (left or right)
78411, Revision 2 – Long Basket
94011, Revision 0 – Extra Large (ski) Basket
Options 70406, Revision 2 – Front end cutout – 764/776/784/940

Robinson R44 – left or right
90611, Revision 0 – Standard Basket (left or right)

Bell 206B – right side only
80211, Revision 0 – Short Basket
80311, Revision 0 – Medium Basket
81111, Revision 0 – Long Basket
Options 70406, Revision 2 – Front end cutout – 802/803/811

Bell 429 – right or left
95911, Revision 0 – Standard Basket

Bell Medium – left or right
75111, Revision 0 – Standard Basket
95511, Revision 0 – Extra Large (ski) Basket
Options 70407, Revision 1 – Front end cutout – 751
704 , Revision – Front end cutout – 955

MD600
82811, Revision 0 – Standard Basket

Options – Applicable to all models
70403, Revision 5 – Auxiliary Latch

CARGO BASKET BODY FABRICATION - COMMON

Complete
(initial or SCA #)

Work Order: _____

Date Open: _____

1. Rim Assembly – Basket Body ADC
    a. Cut and fit ¾" x 0.035 material to fit rim jig.
        i. 1 or 2 lid prop bushing holes in short tube – refer to drawing
    b. Record material PO on attached material list.
    c. Remove writing on tubes with acetone and scotch bright.
    d. For extra large baskets – drill #30 (0.129) vent holes to vent stringer tubes into rims.
    e. *94611 (206L/407 XL ski) only* – drill for 4 threaded bushings before assembling rim.

2. Weld Rim Assembly. AD-05
    a. Record welding rod PO on attached material list.
    b. *94611 (206L/407 XL ski) only* – weld 4 threaded bushings into inboard rim tube.

3. Inspection ADC
    a. Rim for complete welds

4. Frame assembly – body ADC
    a. General
        i. Vent holes shall be #30 (0.129), and located inside the structure wherever possible to allow venting of weld gasses through existing holes (i.e. lid prop bushing, hoops, etc.)
    b. Grind corner welds from step 2 on rim to allow hoops to sit flat.
    c. Pull required hoops from stock - standard, attachment, handle.
        i. If hoops are not in stock see detailed procedure sheet for specific hoop fabrication.
        ii. Ensure vent hole is located at centre of tube to vent spine tubes.
    d. Assemble hoops with attachment lug locating jig and hoop spacing jig.
        i. Ensure correct order and orientation of hoops. Refer to drawing.
            1. Attachment lugs are on inboard side.
            2. Handle bracket bushings are on outboard side, second hoop from both ends. May be on attachment hoops.
        ii. Run 3/8-24 tap into attachment lugs to ensure clear threads.
        iii. Bolt attachment lug locating jig to attachment hoops with 3/8-24 bolts.
        iv. Attach inboard and outboard hoop spacing jigs to all hoops using 1" C-clamps. Raise jigs approximately 2" off table to allow room to weld around hoops.
        v. Attach bottom (spine) jig to all hoops using 1" C-clamps along the centre line of the basket. Ensure jig is straight prior to tightening all clamps.
    e. Cut ½" x 0.035 material to fit spine jig.
    f. Cut ½" x 0.035 material for strut to fit from lower inboard attachment to upper outboard rim.
        i. Refer to applicable drawing for position, not required on some baskets.
    g. *Option*: Cut ½" x 0.035 material for front end cutout. Record material PO on attached material list.
    h. *90611 (R44) only*: Cut ½" x 0.035 material to fit front end structure. Record material PO on attached material list.
    i. Drill vent holes into attachment hoop and/or rim to vent strut(s) and front end cutout.

j. Record hoop WOs and material POs on attached material list.
k. Remove writing on tubes with acetone and scotch bright.
l. Insert rim assembly into jig and set frame assembly onto rim. Ensure correct orientation of lid prop bushings in rim to frame. Bushing hole must be closer to attachment side.
m. Align hoops to rim in accordance with drawing. General positions:
    i. Extra large baskets
        1. inboard side of hoops (attachment side) aligns to OUTSIDE of rim
        2. outboard side of hoops (handle side) aligns to INSIDE of rim
        3. forward and aft hoops align to INSIDE of rim
    ii. All other baskets
        1. inboard side of hoops (attachment side) aligns to INSIDE of rim
        2. outboard side of hoops (handle side) aligns to INSIDE of rim
        3. forward and aft hoops align to INSIDE of rim, except R44

5. TIG weld frame to rim assembly. AD-05
    a. Ensure lug locating jig and hoop locating jigs are in place. Jigs must remain in place for as long as practical during welding.
    b. Strut tubes and front end cutout (see step 4.f. and g.) must be welded in place after the hoops are welded to the rim. Jig(s) must be in place prior to welding strut tubes.
    c. Robinson R44 (90611) requires fitting and welding of forward end after remainder of basket frame is welded. Use jig to support front hoop.
    d. Record welding rod PO on attached material list.

6. Inspection A006
    a. Frame assembly for complete welds.

7. Mesh assembly. A004
    a. Pull sheet of expanded mesh from stock. Record material PO on attached material list.
    b. Cut mesh to size for body.
    c. Remove surface rust with scotch-brite.
    d. Bend body mesh – use table with bend markings on top. Lock wheels on table.
        i. For extra wide baskets only –
            1. Set ¾" angle along edge of table under mesh sheet. Set 1.5" square tube on top of mesh aligned with angle on edge of table. Clamp in place with 6" C-clamps.
            2. Bend upper edge of sheet just past a cell intersection to make a flange 2.5" - 3.25" wide. Closer to 2.5" is preferred, full cell intersection on flange side at bend is required.
            3. Bend down by hand as far as possible, then use a hammer to flatten the bend tight against the angle on the edge of the table.
        ii. Using markings on table, align sheet to indicated edge.
        iii. Using markings on table, align 3" tube to required position and clamp tube in place.
        iv. Bend mesh by hand tightly over tube along length of tube.
        v. Keeping mesh in place, un-clamp 3" tube, move to other position and clamp tube in place.
        vi. Bend mesh by hand tightly over tube along length of tube.
    e. Install attachment lug jig onto basket frame.

f. Ensure end struts are welded in basket frame if required by the drawing.
g. Insert mesh into basket.
    i. General
        1. Some cells may interfere with correct positioning, especially at the upper corners and around struts. Bend cell(s) in as required, do not cut cells off.
        2. Ideally welds will be located on mesh intersections. Shift mesh if possible to minimize welds located off mesh intersections.
        3. Ensure mesh reaches all edges of basket BEFORE trimming. Regardless of progress in clamping, remove clamps and shift mesh if required.
        4. Ensure cleco clamps are placed from the inside of the basket to allow removal during welding. Cleco clamps may be used from the outside during fitting, but must be removed prior to welding.
    ii. Extra large baskets only – seat corner of mesh with flange into inboard upper corner of frame. Use C-clamps on edge of flange as required to maintain tight fit.
    iii. Starting at inboard top edge of basket, clamp mesh to hoop near top rim using cleco clamps onto hoops. For regular size baskets, edge of mesh should sit approximately half way up rim tube.
    iv. Working down the inboard side, clamp mesh to hoops with cleco clamps. Clamp down into radius of hoop and continue clamping as required to maintain tight fit in corner of hoop. After the corners are tight, two clamps just onto the radius on both ends should be sufficient to hold the corner tight, remove all extra clamps.
    v. Clamp mesh to spine in at least 1 place per section.
    vi. Working up the outboard side, clamp the mesh into the radius of hoop and continue clamping as required to maintain tight fit in corner of hoop. After the corners are tight, 2 clamps just onto the radius on both ends should be sufficient to hold the corner tight, remove all extra clamps.
    vii. Trim upper outboard edge of mesh if required, edge of mesh must be low enough on rim tube to prevent the weld from protruding above the edge of the rim. Some sheets are tapered and may require ½ to 1 cell to be removed over some or all of the length of the basket. De-burr cut edges with a sanding disc on a die-grinder. Straighten cut cells with duck-bill pliers. Clamp mesh near upper edge to hoops with cleco clamps after trimming.
    viii. Trim ends to land on hoops, at mesh intersections if possible.
h. Cut mesh to fit ends. Record material PO on attached material list.
    i. Remove surface rust with scotch-brite.
    ii. Ensure mesh is cut at intersections where possible.
    iii. Bend top edge of mesh 1/8"-3/16" down at 45 degrees
    iv. Cut for front end cutout if required.
i. 90611 (R44) only: Cut mesh to fit upper forward end. Record material PO on attached material list.
    i. Remove surface rust with scotch-brite.
    ii. Ensure mesh is cut at intersections where possible.
    iii. Bend top edge of mesh 1/4" down at 60 degrees.
    iv. Fit mesh to front end of basket.

Complete
(initial or SCA #)

8. Weld mesh to frame assembly per drawing. AD-05
    a. Ensure lug locating jig is in place prior to welding.
    b. General welding requirements for all baskets, MIG welding:
        i. Every intersection at top edges.
        ii. Every intersection at ends.
        iii. First 5 intersections down on hoops, then every second intersection.
        iv. Every intersection along spine.
        v. Extra large baskets – every intersection along corner.
        vi. Every intersection around ends
        vii. Every intersection along struts (if applicable)
    c. Bend and trim cells bent in to fit mesh as required and weld in position.
    d. Grind high spots off body mesh welds on ends before welding end mesh.
    e. *90611 (R44) only* – weld lid prop bushing (step 9) into rim BEFORE welding upper mesh on forward end of basket assembly.
    f. Record welding rod PO on attached material list.

9. Weld basket components AD-05
    a. TIG weld lid prop bushing(s), one or two per drawing.
        i. Record welding rod PO on attached material list.
        ii. Record lip prop bushing WO on attached material list.
    b. TIG weld caps to close top of 1" hoops as applicable.
    c. 94611 (Bell206L/407 XL ski) only: cut rim over cross tube gap.
        i. Cut inboard rim on aft end. Grind flush with hoops.
        ii. TIG weld caps on open tubes.
        iii. Record cap material PO on attached material list.
    d. 95911 (Bell 429) only: placard bracket to forward upper corner of basket.
        i. Record welding rod PO on attached material list.
        ii. Record placard bracket WO on attached material list.

10. Clean up ~~AD06~~
    a. Grind high spots off mesh welds.
    b. Tighten mesh using special pliers. Tighten enough to remove "oil canning", where mesh springs in or out. Do not tighten in corners of hoops, mesh will be deformed.
    c. Drill #9 through lid prop bushing(s). De-burr hole(s).
    d. Remove surface rust with scotch-brite pad.

11. Final Inspection _____
    To be completed by a different person than the previous steps.
    a. Basket body assembly for complete welds, and required minimum mesh weld locations.
    b. Filled vent holes – usually on hoops
    c. Overall condition and conformity to drawing(s).
        i. Hoops for height.
        ii. Rim for width and length and alignment.
        iii. Lid prop lugs in correct ends.
        iv. Fore/aft strut in hoop if required by drawing.
    d. Material lists complete.

Complete
(initial or SCA #)

e. Tag complete basket body assembly in preparation for powder coating.

12. Powder Coating — AOG

a. Parts are to be powder coated white in accordance with commercial practices.
b. Record powder coating PO.
c. Inspect powder coating on receiving.
d. Tag basket body assembly and place into stock in preparation for assembly.

Work Order: 2013-47

Date Opened:

Material Tracking Sheet
Robinson R44
Lid Fabrication

Ass'y Step	Qty	Detail Drawing	Part Number	Description	Material	PO/WO
			90612-01- 01	**Lid Assembly**	(-01 RH, -02 LH)	
Step 1				*Rim Assembly*		
	. 2		--	3/4" Tube - Long Rim (55 5/8")	4130 Steel, ¾" x 0.035 Sqr. Tube	14009
	. 2		--	3/4" Tube - Short Rim (22.5")	4130 Steel, ¾" x 0.035 Sqr. Tube	14009
Step 2				*Weld Rim Assembly*		
	. A/R		--	Welding Rod	ER70S-2 TIG Rod	14033
Step 3				*Inspection - Rim*	*None*	
Step 4				*Frame Assembly*		
	. 2		--	3/4" Tube - Cross Member (21")	4130 Steel, ¾" x 0.035 Sqr. Tube	14009
Step 6				*Weld Frame Assembly*		
	. A/R		--	Welding Rod	ER70S-2 TIG Rod	14033
Step 7				*Inspection - Frame Assembly*	*None*	
Step 8				*Mesh Assembly*		
	. 1		--	Mesh (lid - 55" x 22")	3/4-16F Expanded Mild Steel sheet	12130
Step 9				*Weld Mesh*		
	. A/R		--	Welding Rod	ER70S-6 MIG Wire	14005

Work Order: 2013-47

Date Opened:

Material Tracking Sheet
Robinson R44
Lid Fabrication

Ass'y Step	Qty	Detail Drawing	Part Number	Description	Material	PO/WO
Step 10				*Weld Lid Components*		
	. 1	84262	84262-01	Upper Handle Bracket Assembly		2014-02
	. . 4		36273-01	Lid Bracket	321 Stainless, 0.050 Sheet	
	. . 2		36275-02	Support	304 Stainless, 5/16" Rod	
	. A/R		--	Welding Rod	ER308L TIG Rod	14028
	. 1		49216-01	Spacer (Lid prop)	304 Stainless, ½" Dia.	2014-09
	. A/R		--	Welding Rod	ER308L TIG Rod	14028
	. 1		36204-10	Placard Bracket	1018 Steel, 0.035" Sheet	2014-18
	. A/R		--	Welding Rod	ER70S-2 TIG Rod	14033
Step 11				*Clean Up*	*None*	
Step 12				*Inspection - Final Assembly*	*None*	
Step 13				Powder Coating		

Work Order: 2013-47

Date Opened: _____

Material Tracking Sheet
Robinson R44
Basket Body Fabrication

Ass'y Step	Qty	Detail Drawing	Part Number	Description	Material	PO/WO
			90611-01- 01	**Basket Assembly**	-01 RH, -02 LH	
Step 1				*Rim Assembly*		
	. 2		--	3/4" Tube - Long Rim (55 5/8")	4130 Steel, ¾" x 0.035 Sqr. Tube	14009
	. 2		--	3/4" Tube - Short Rim (22.5")	4130 Steel, ¾" x 0.035 Sqr. Tube	14009
Step 2				*Weld Rim Assembly*		
	. A/R		--	Welding Rod	ER70S-2 TIG Rod	
Step 3				*Inspection - Rim*	*None*	
Step 4				*Frame Assembly*		
	. 2		49210-02	Hoop - standard	4130 Steel, ½" x 0.035 Sqr. Tube	14009
	. 1		49210-02	Hoop - with handle provisions	4130 Steel, ½" x 0.035 Sqr. Tube	14009
	. 1		90621-01-XX	Aft Attachment hoop		
	. 1		90622-01-XX	Forward Attachmen Hoop		2013-47
	. 4		--	1/2" Tube - spine	4130 Steel, ½" x 0.035 Sqr. Tube	14009
	. 1		--	1/2" Tube - strut	4130 Steel, ½" x 0.035 Sqr. Tube	14009
	. 1		--	1/2" Tube - cross member (21")	4130 Steel, ½" x 0.035 Sqr. Tube	14009
Step 5				*Weld Frame Assembly*		
	. A/R		--	Welding Rod	ER70S-2 TIG Rod	
Step 6				*Inspection - Frame Assembly*	*None*	
Step 7				*Mesh Assembly*		
	. 1		--	Mesh (Body - 48" x 56")	3/4-16F Expanded Mild Steel sheet	12130
	. 1		--	Mesh (End - 22" x 15.5")	3/4-16F Expanded Mild Steel sheet	12130
	. 1		--	Mesh (End - 22" x 9")	3/4-16F Expanded Mild Steel sheet	12130
	. 1		--	Mesh (End - 22" x 21")	3/4-16F Expanded Mild Steel sheet	12130

Work Order: 2013-47

Date Opened:

Material Tracking Sheet
Robinson R44
Basket Body Fabrication

Ass'y Step	Qty	Detail Drawing	Part Number	Description	Material	PO/WO
Step 8				*Weld Mesh*		
	. A/R		--	Welding Rod	ER70S-6 MIG Wire	14005
Step 9				*Weld Basket Components*		
Step 9.a.	. 1		49215-01	Spacer (Lid prop)	304 Stainless Steel, ½" Dia.	204-39
	. A/R		--	Welding Rod	ER308L TIG Rod	14028
Step 9.b.	. 1		--	Cap	1018 Mild Steel, 0.032" Sheet	
	. A/R		--	Welding Rod	ER70S-2 TIG Rod	14033
Step 10				*Clean Up*	*None*	
Step 11				*Inspection - Final Assembly*	*None*	
Step 12				Powder Coating		

1. Approving Civil Aviation Authority/Country	2. AUTHORIZED RELEASE CERTIFICATE FORM ONE	3.Form Tracking No.
Transport Canada		

4. Organization Name and Address	5. Work Order/Contract/Invoice
AERO Design Ltd. – 2013 39th Avenue NE, Calgary, Alberta, T2E 6R7	WO2013-47

6. Item	7. Description	8. Part Number	9. Qty.	10. Serial/Batch No.	11. Status/Work
	RH Cargo Basket	90610-01-01	1	90601-12	New

12. Remarks

13a. Certifies that the items identified above were manufactured in conformity to:

☒ Approved design data and are in condition for safe operation.

☐ Non approved design data specified in block 12.

~~14a. ☐ CAR 571.10 Maintenance Release~~

~~☐ Other regulation specified in block 12.~~

~~Certifies that unless otherwise specified in block 12, the work identified in block 11 and described in block 12, has been performed in compliance with the *Canadian Aviation Regulations*.~~

13b. Signature	13c. Approved Organization Number	~~14b. Signature~~	~~14c. Approved Organization Number~~
AD02	AMF 73-04		
13d. Name	**13e. Date (dd/mmm/yyyy)**	**~~14d. Name~~**	**~~14e. Date (dd/mmm/yyyy)~~**
Jeff Clarke – AD02	11 June 2014		

Installer Responsibilities

This certificate does not constitute authority to install.

Installers working in accordance with the national regulations of a country other than that specified in block 1 must ensure that their regulations recognize certifications from the country specified.

Statements in blocks 13a or 14a do not constitute installation certification. In all cases, the technical record for the aircraft must contain an installation certification issued in accordance with the applicable national regulations before the aircraft may be flown.

See Planes North

1. Approving Civil Aviation Authority/Country	2. AUTHORIZED RELEASE CERTIFICATE FORM ONE	3.Form Tracking No.
Transport Canada		

4. Organization Name and Address	5. Work Order/Contract/Invoice
AERO Design Ltd. – 2013 39th Avenue NE, Calgary, Alberta, T2E 6R7	WO2013-47

6. Item	7. Description	8. Part Number	9. Qty.	10. Serial/Batch No.	11. Status/Work
	RH Cargo Basket	90610-01-01	1	90601-15	New

12. Remarks

13a. Certifies that the items identified above were manufactured in conformity to:

☒ Approved design data and are in condition for safe operation.

☐ Non approved design data specified in block 12.

~~14a. ☐ CAR 571.10 Maintenance Release~~

~~☐ Other regulation specified in block 12.~~

~~Certifies that unless otherwise specified in block 12, the work identified in block 11 and described in block 12, has been performed in compliance with the *Canadian Aviation Regulations*.~~

13b. Signature	13c. Approved Organization Number	~~14b. Signature~~	~~14c. Approved Organization Number~~
AD02	AMF 73-04		
13d. Name	**13e. Date (dd/mmm/yyyy)**	**~~14d. Name~~**	**~~14e. Date (dd/mmm/yyyy)~~**
Jeff Clarke – AD02	25 May 2015		

Installer Responsibilities

This certificate does not constitute authority to install.

Installers working in accordance with the national regulations of a country other than that specified in block 1 must ensure that their regulations recognize certifications from the country specified.

Statements in blocks 13a or 14a do not constitute installation certification. In all cases, the technical record for the aircraft must contain an installation certification issued in accordance with the applicable national regulations before the aircraft may be flown.

AWS GERMANY

Aero Design

Parts Distribution Sheet

Description: _____ WO# 2013-47

From PO or WO #	Quantity	Description	Part Number	For WO #

Aero Design Ltd.

Date:

Type: S/N: Work Order:

Discrepancy	By	Rectification	AME
Weld basket rim # 90611-01-01	AD-05	(1 only)	Dec 3/2013
Weld basket lid # 90612-01-01	AD-05	(1 only)	Dec 3/2013
Weld basket body to basket rim 90611-01-01.	AD-05	(1 only)	Dec 3/2013
Weld mesh to basket lid # 90612-01-01	AD-05	(1 only)	Dec 3/2013
Weld ~~and grind~~ corners of data plate brackets. # 36204-10	AD-05	(7 of) B#	Dec 4/2013
Weld bushing #49216-01 to lid assy. 90612-01-01.	AD-05	(1 of) B# 2013-55	Dec 4/2013
weld handle brackets # 36273-01 to lid assy. 90612-01-01.	AD-05	(1 of)(2 brackets) B# 10037	Dec 4/2013
Weld data bracket # 36204-10 to lid assy. 90612-01-01.	AD-05	(1 of) B#	Dec 4/2013
Weld hoop end cap to basket assy. 90611-01.	AD-05	(1 of) WO# 2013-47	Dec 4/2013
Weld bushings (2) to lid assy. 69812-01.	AD-05	(1 of)(2 places) Bushing 42916-01 B# 2013-55	Dec 4/2013
Weld handle brackets (2) 36273-01 to lid assy. 69812-01.	AD-05	(1 of)(2 places) B# 10037	Dec 4/2013
Weld data plate bracket # 36204-10 to lid assy. 69812-01.	AD-05	(1 of)(1 place B#)	Dec 4/2013
Weld dataplate bracket # 36204-10 to lid assy. 69812-01.	AD-05	(1 of)(1 place B#)	Dec 4/2013

Work Order: 2013-47

Date Opened: _____

Material Tracking Sheet
Robinson R44
Basket Assembly

Ass'y Step	Qty	Detail Drawing	Part Number	Description	Material	PO/WO
			90610-01- 01	**Cargo Basket Assembly**	(-01 RH, -02 LH)	
Step 1				*Lid Assembly*		
	. 1		90612-01- 01	Basket Lid Assembly		
Step 1.a.	. . 3		49205-14	Bumper	Argus Industries Bumper	11010
	. . A/R		--	Sealant	Commercial Silicone RTV sealant	
Step 1.b.	. . 1		90627-01	Placard	0.063 Sheet, 6061-T6 Aluminum	SN/ 96-01-12
	. . 4		CR3213-4-02	Cherry Rivet		14032
Step 2				*Basket Assembly*		
Step 2.a.	. 1		90611-01- 01	Basket Body Assembly		
	. . 3		96710-01	Fitting	Alternate: Ancra 40088-14	13642
	. . 1		90628-01	Fitting		2014-36
	. . 8		NAS1149F0663P	Washer		
Step 3				*Hinge Installation*		
	. 1		MS20001P4	Piano Hinge	54"	13061
	. 8		CR3523-5-02	Cherry Rivet		12087
	. A/R		CR3213-5-02	Cherry Rivet		13626
Step 4	. 1	84255	84255-01	*Handle Installation*		
Step 4.a.	. . 2		84267-01	Bracket	Delrin, ¾" Sheet	
	. . 4		AN3-11A	Bolt		14009
	. . 8		NAS1149F0363P	Washer		13084
	. . 4		MS21044N3	Nut		13083
Step 4.b.	. . 1		84261-01	Handle Assembly		
	. . 2		36278-01	Spring (1 left, 1 right)	304 Stainless, 1/16" Dia Music Wire	13085
	. . 2		36275-01	Bushing	Brass, 5/16" Dia	13050
	. . 2		AN3-12A	Bolt		13089
	. . 4		NAS1149F0363P	Washer		13084
	. . 2		MS21044N3	Nut		13083

Work Order: 2013-47

Date Opened:

Material Tracking Sheet
Robinson R44
Basket Assembly

Ass'y Step	Qty	Detail Drawing	Part Number	Description	Material	PO/WO
Step 5				*Lid Brace Installation*		
	. 1		36280-01	Brace Assembly	14020	
	. 1		AN3-15A	Bolt	13054	
	. 1		AN3-17A	Bolt	13094	
	. 2		AN970-3	Washer	12094	
	. 3		NAS1149F0363P	Washer	13084	
	. 2		MS21044N3	Nut	13083	
Step 6				*Inspection*	*None*	

THIS DRAWING CONTAINS INFORMATION AND DATA WHICH IS PROPRIETARY TO AERO DESIGN LTD. THIS DRAWING, OR ANY PORTION THEREOF, MAY NOT BE REPRODUCED, COPIED, OR DUPLICATED IN ANY MANNER, NOR USED FOR MANUFACTURING WITHOUT THE WRITTEN CONSENT OF AERO DESIGN LTD. BY ACCEPTING THIS DRAWING FOR REFERENCE, THE RECIPIENT AGREES TO HOLD AERO DESIGN LTD. HARMLESS FROM THE USE, OR MISUSE, OF THIS DRAWING OR THE INFORMATION CONTAINED THEREON.

REV.	DESCRIPTION OF CHANGE	INITIALS	DATE
0	INITIAL ISSUE		

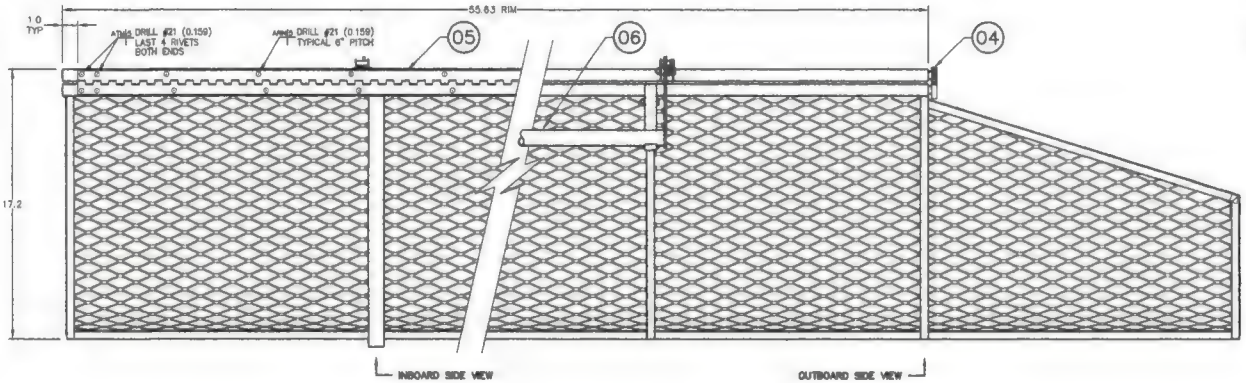

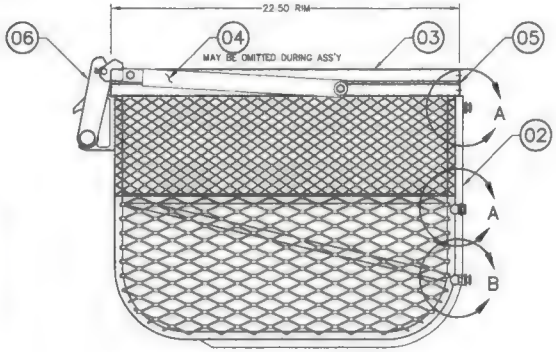

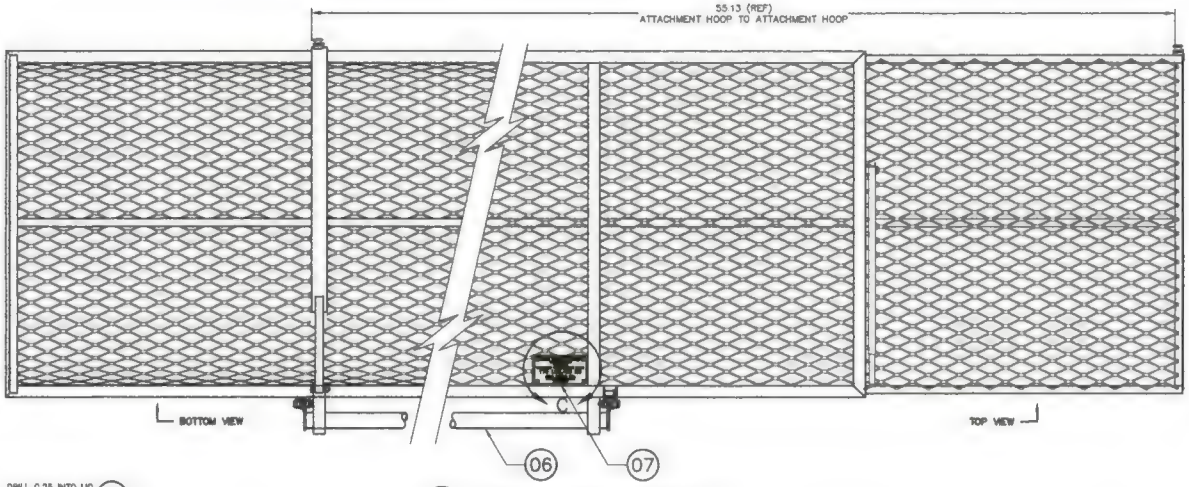

(01) CARGO BASKET ASSEMBLY

RIGHT HAND SHOWN, LEFT HAND OPPOSITE

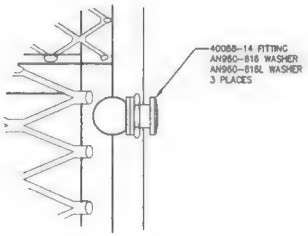

DETAIL A

SCALE 1 : 1

FRONT TOP AND REAR TOP AND BOTTOM POSITIONS

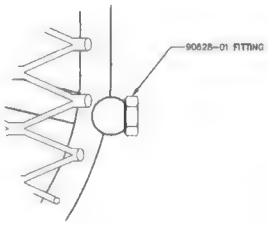

DETAIL B

SCALE 1 : 1

FRONT BOTTOM POSITION ONLY

NOTE:

1. ALL DIMENSIONS SHOWN ARE FOR REFERENCE ONLY. DIMENSIONS OF COMPONENTS AND COMPLETE ASSEMBLY ARE DETERMINED IN PREVIOUS STEPS.

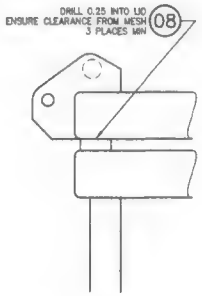

BUMPER INSTALLATION

SCALE 1 : 1

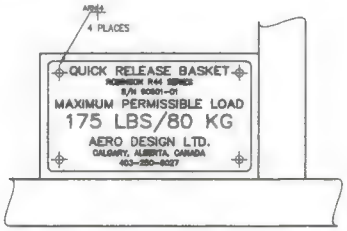

DETAIL C

SCALE 1 : 1

LOOKING AT PLACARD BRACKET

A/R	A/R	AN960-616L		WASHER			
A/R	A/R	AN960-616		WASHER			
1	1	90628-01		FITTING			
3	3	40088-14		FITTING	ANCRA		
8	8	CR3523-5-02		CHERRY RIVET			
A/R	A/R	CR3213-5-02		CHERRY RIVET			
4	4	CR3213-4-02		CHERRY RIVET			
3	3	49205-14	08	BUMPER	ARGUS INDUSTRIES		
1		90627-02	07	PLACARD			
	1	90627-01	07	PLACARD			
1	1	84255-01	06	HANDLE BAR INSTALLATION			
1	1	MS20001P4	05	PIANO HINGE			53.5 LONG
1	1	36280-01	04	BRACE ASSEMBLY			
1		90612-01-02	03	BASKET LID ASSEMBLY (LEFT HAND)			
	1	90612-01-01	03	BASKET LID ASSEMBLY (RIGHT HAND)			
1		90611-01-02	02	BASKET BODY ASSEMBLY (LEFT HAND)			
	1	90611-01-01	02	BASKET BODY ASSEMBLY (RIGHT HAND)			
		90610-01-02	01	CARGO BASKET ASSEMBLY (LEFT HAND)			
		90610-01-01	01	CARGO BASKET ASSEMBLY (RIGHT HAND)			
-02	-01	PART NO.	ITEM	DESCRIPTION	MATERIAL	MATERIAL SPEC	STOCK SIZE
QTY 90610-01							

LIST OF MATERIALS

BASIC CODE REF NAS 523

C=COUNTERSUNK
D=DIMPLE
DIGIT=# OF SHEETS TO BE DIMPLED

DASH NO. FOR DIAMETER
N=MFD. HEAD NEAR SIDE
F=MFD. HEAD FAR SIDE

DASH NO. FOR LENGTH

BASIC CODES:
BJ=MS20470AD
BB=MS20426AD
ARN=CR3213
ATM=CR3523

INSTALL NEW RIVET
REMOVE/REPLACE RIVET
EXISTING RIVET

APPROVALS		DATE
DRAWN	JEFF CLARKE	13 SEPT 2010
CHECKED:	E. BURGOIN	

UNLESS OTHERWISE SPECIFIED DIMENSIONS ARE IN INCHES.
TOLERANCES ON:

DECIMALS		ANGLES
X.XXX	±0.010	±1/2°
X.XX	±0.03	
X.X	±0.1	

AERO DESIGN LTD.
CONSULTING ENGINEERS, TRANSPORT CANADA APPROVALS, DAR 290M
2013 - 39TH AVENUE N.E., CALGARY, ALBERTA, CANADA, T2E 6S7
tel: (403) 250-5287 fax: (403) 250-5333 www.aerodesign.ca

ROBINSON R44, R44 II
QUICK RELEASE CARGO BASKET
CARGO BASKET ASSEMBLY

SCALE 1 : 4	DWG SIZE	DWG NO	REV
SHEET 1 OF 1	A1	90610	0

THIS DRAWING CONTAINS INFORMATION AND DATA WHICH IS PROPRIETARY TO AERO DESIGN LTD. THIS DRAWING, OR ANY PORTION THEREOF, MAY NOT BE REPRODUCED, COPIED, OR DUPLICATED IN ANY MANNER, NOR USED FOR MANUFACTURING WITHOUT THE WRITTEN CONSENT OF AERO DESIGN LTD. BY ACCEPTING THIS DRAWING FOR REFERENCE, THE RECIPIENT AGREES TO HOLD AERO DESIGN LTD. HARMLESS FROM THE USE, OR MISUSE, OF THIS DRAWING OR THE INFORMATION CONTAINED THEREON.

REV.	DESCRIPTION OF CHANGE	INITIALS	DATE
0	INITIAL ISSUE		

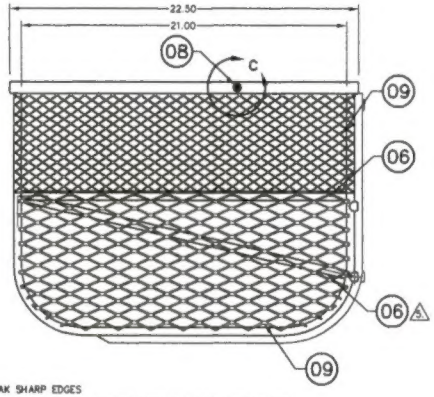

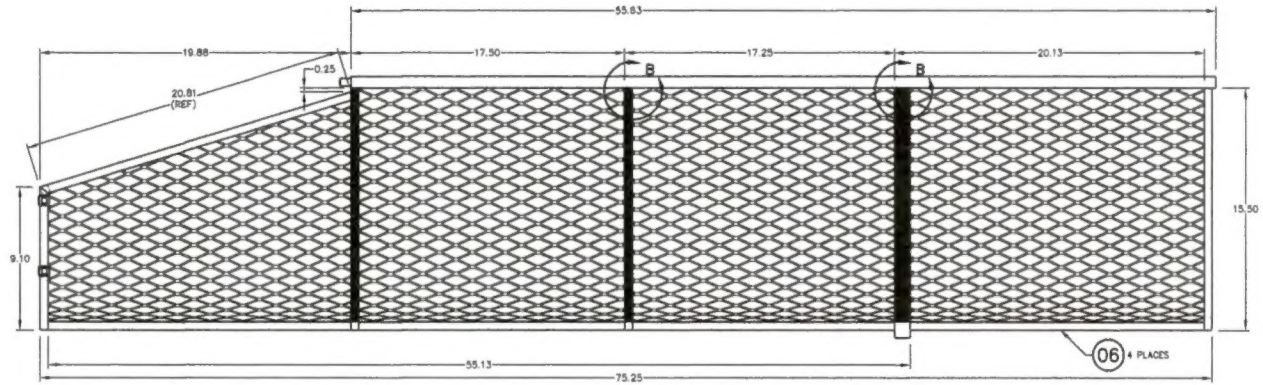

NOTES:

1. REMOVE ALL BURRS AND BREAK SHARP EDGES
2. PRIOR TO WELDING, DRILL 3/32 VENT HOLES IN ASSEMBLY FOR VENTING OF WELD GASES. WHEN ASSEMBLY IS COMPLETE, FILL ALL VENT HOLES WITH ROSETTE WELD.
3. WELDING OF 4130 STEEL TO BE COMPLETED BY GTAW METHOD TO AMS 2685C. WELDING ROD SHALL CONFORM TO ER70S-2 OR EQUIVALENT.
4. INSTALL ITEM 7 (HANDLE BRACKET ASSEMBLY) IN ACCORDANCE WITH AERO DESIGN LTD. DRAWING 84262 TYP 2 PLACES.
5. STRUT MEMBER ON FWD END OF BASKET ONLY.
6. THOROUGHLY CLEAN AND POWDER COAT BASKET SUB-ASSEMBLIES PRIOR TO ASSEMBLY.

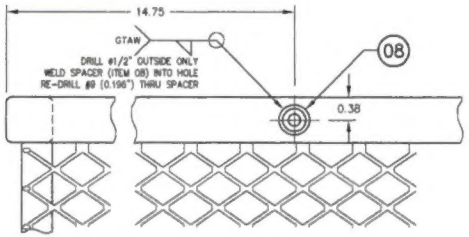

DETAIL C

SCALE 1:1

VIEW LOOKING AT FRONT RIM OF BAKSET

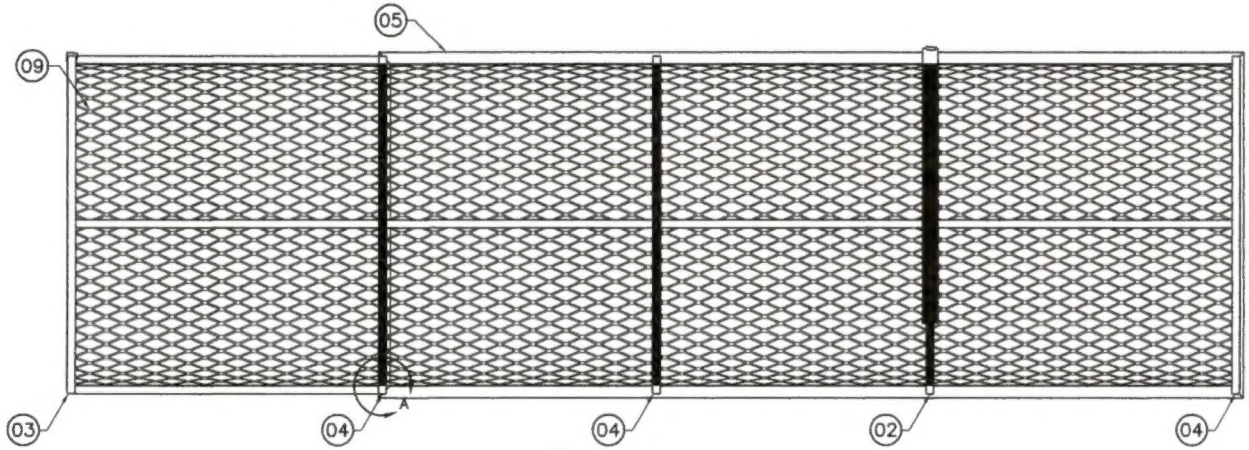

01 BASKET BODY ASSEMBLY

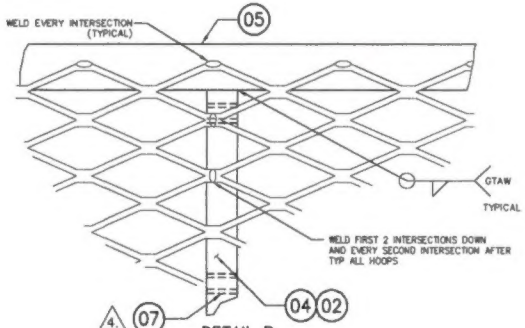

DETAIL B

SCALE 1:1

VIEW LOOKING AT INNER SURFACE OF BASKET, OUTBOARD SIDE

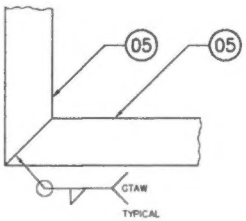

DETAIL A

SCALE 1:1

-02 QTY	-01 QTY	PART NO.	ITEM	DESCRIPTION	MATERIAL	MATERIAL SPEC	STOCK SIZE
A/R	A/R	3/4-16F	09	MESH	STEEL	COMMERCIAL	
1	1	49215-01	08	SPACER			
1	1	84262-01	07	HANDLE BRACKET ASSEMBLY			
A/R	A/R		06	TUBE	4130 STEEL, COND. N	MIL-T-6736	0.5 X 0.035 SQR. TUBE
A/R	A/R		05	TUBE	4130 STEEL, COND. N	MIL-T-6736	0.75 X 0.035 SQR. TUBE
3	3	49210-02	04	HOOP			
1		90622-01-02	03	FORWARD ATTACHMENT HOOP (LEFT HAND)			
	1	90622-01-01	03	FORWARD ATTACHMENT HOOP (RIGHT HAND)			
1		90621-01-02	02	AFT ATTACHMENT HOOP (LEFT HAND)			
	1	90621-01-01	02	AFT ATTACHMENT HOOP (RIGHT HAND)			
		90611-01-02	01	BASKET BODY ASSEMBLY (LEFT HAND)			
		90611-01-01	01	BASKET BODY ASSEMBLY (RIGHT HAND)			

LIST OF MATERIALS

APPROVALS		DATE
DRAWN:	JEFF CLARKE	03 SEPT 2010
CHECKED:	E. BURGOIN	

UNLESS OTHERWISE SPECIFIED DIMENSIONS ARE IN INCHES.
TOLERANCES ON:
DECIMALS X.XXX ±0.010, X.XX ±0.03, X.X ±0.1
ANGLES ±1/2°

AERO DESIGN LTD.
CONSULTING ENGINEERS, TRANSPORT CANADA APPROVALS, DAR 290M
2013 – 39TH AVENUE N.E., CALGARY, ALBERTA, CANADA, T2E 6R7
tel: (403) 250-8027 fax: (403) 250-6333 www.aerodesign.ca

ROBINSON R44, R44 II
QUICK RELEASE CARGO BASKET
BASKET BODY ASSEMBLY

SCALE 1 : 4	DWG. SIZE	DWG. NO.	REV.
SHEET 1 OF 1	A1	90611	0

THIS DRAWING CONTAINS INFORMATION AND DATA WHICH IS PROPRIETARY TO AERO DESIGN LTD. THIS DRAWING, OR ANY PORTION THEREOF, MAY NOT BE REPRODUCED, COPIED, OR DUPLICATED IN ANY MANNER, NOR USED FOR MANUFACTURING WITHOUT THE WRITTEN CONSENT OF AERO DESIGN LTD. BY ACCEPTING THIS DRAWING FOR REFERENCE, THE RECIPIENT AGREES TO HOLD AERO DESIGN LTD. HARMLESS FROM THE USE, OR MISUSE, OF THIS DRAWING OR THE INFORMATION CONTAINED THEREON.

REV.	DESCRIPTION OF CHANGE	INITIALS	DATE
0	INITIAL ISSUE		

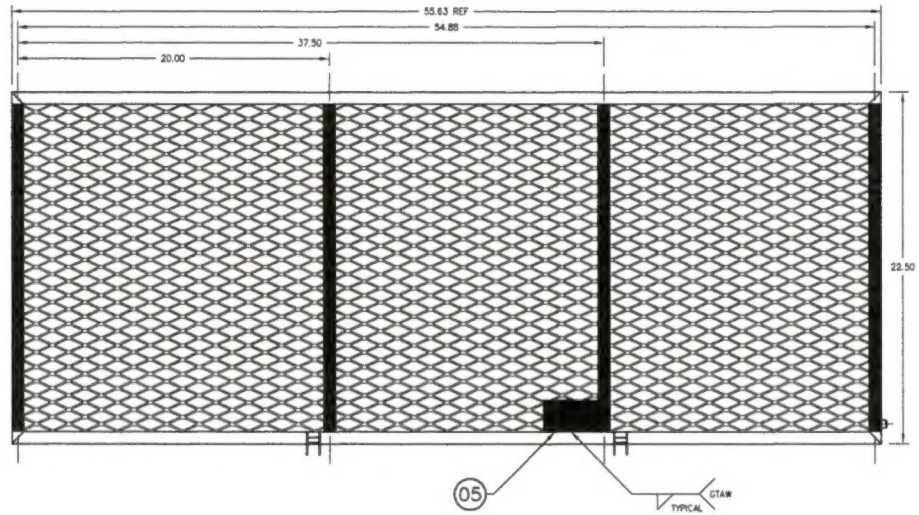

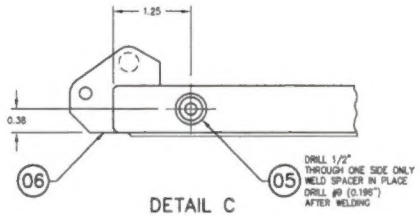

DETAIL C

SCALE 1 : 1

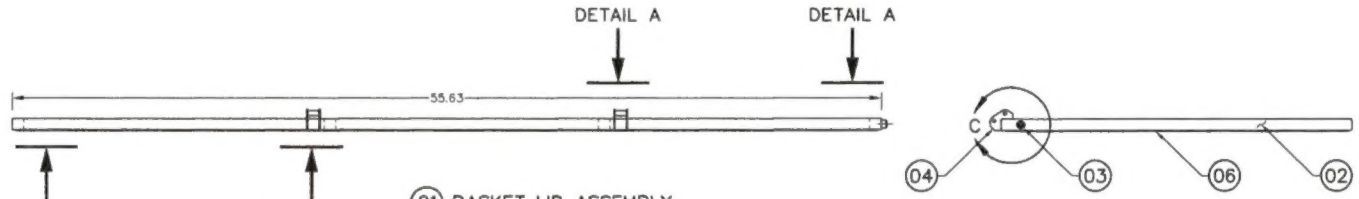

01 BASKET LID ASSEMBLY

RIGHT HAND ASSEMBLY SHOWN, LEFT HAND OPPOSITE

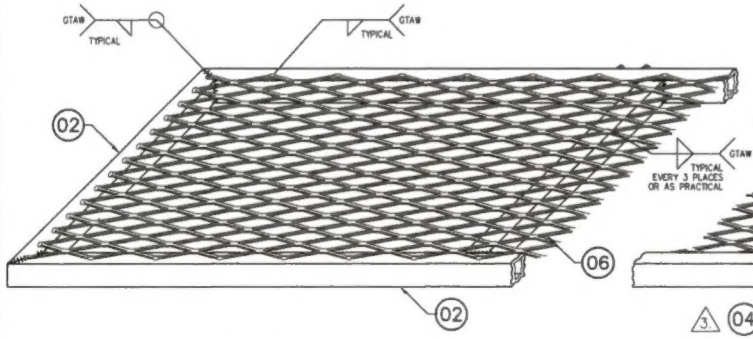

DETAIL B
LOOKING AT BOTTOM

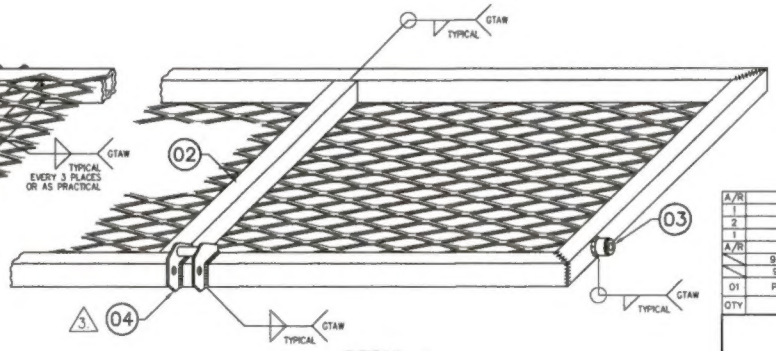

DETAIL A
LOOKING AT TOP

NOTES:

1. REMOVE ALL BURRS AND BREAK SHARP EDGES
2. WELDING OF 4130 STEEL TO BE COMPLETED BY GTAW METHOD TO AMS 2685C. WELDING ROD SHALL CONFORM TO ER70S-2 OR EQUIVALENT.
3. INSTALL ITEM 4 (HANDLE BRACKET ASSEMBLY) IN ACCORDANCE WITH AERO DESIGN LTD. DRAWING 84262 TYP 2 PLACES.
4. WHEN ASSEMBLY IS COMPLETE, FILL ALL VENT HOLES WITH ROSETTE WELD.
5. THOROUGHLY CLEAN AND POWDER COAT BASKET SUB-ASSEMBLIES PRIOR TO ASSEMBLY.

QTY	PART NO.	ITEM	DESCRIPTION	MATERIAL	MATERIAL SPEC	STOCK SIZE
A/R	3/4-16F	06	MESH			
1	36204-10	05	PLACARD BRACKET			
2	84262	04	UPPER HANDLE BRACKET ASSY			
1	49216-01	03	SPACER			
A/R	--	02	TUBE	4130 STEEL, COND. N	MIL-T-6736	0.75 X 0.035 SQR. TUBE
	90612-01-02	01	BASKET LID ASSEMBLY (LEFT HAND)			
	90612-01-01	01	BASKET LID ASSEMBLY (RIGHT HAND)			

LIST OF MATERIALS

APPROVALS		DATE
DRAWN:	JEFF CLARKE	03 SEPT 2010
CHECKED:	E. BURGOIN	

UNLESS OTHERWISE SPECIFIED DIMENSIONS ARE IN INCHES. TOLERANCES ON:

DECIMALS		ANGLES
X.XXX	±0.010	±1/2°
X.XX	±0.03	
X.X	±0.1	

AERO DESIGN LTD.
CONSULTING ENGINEERS, TRANSPORT CANADA APPROVALS, DAR 290M
2013 – 39TH AVENUE N.E., CALGARY, ALBERTA, CANADA, T2E 6R7
tel: (403) 250-8087 fax: (403) 250-6353 www.aerodesign.ca

ROBINSON R44, R44 II
QUICK RELEASE CARGO BASKET
BASKET LID FABRICATION

SCALE 1 : 4	DWG. SIZE	DWG. NO.	REV.
SHEET 1 OF 1	A1	90612	0

THIS DRAWING CONTAINS INFORMATION AND DATA WHICH IS PROPRIETARY TO AERO DESIGN LTD. THIS DRAWING, OR ANY PORTION THEREOF, MAY NOT BE REPRODUCED, COPIED, OR DUPLICATED IN ANY MANNER, NOR USED FOR MANUFACTURING WITHOUT THE WRITTEN CONSENT OF AERO DESIGN LTD. BY ACCEPTING THIS DRAWING FOR REFERENCE, THE RECIPIENT AGREES TO HOLD AERO DESIGN LTD. HARMLESS FROM THE USE, OR MISUSE, OF THIS DRAWING OR THE INFORMATION CONTAINED THEREON.

REV.	DESCRIPTION OF CHANGE	INITIALS	DATE
0	INITIAL ISSUE		

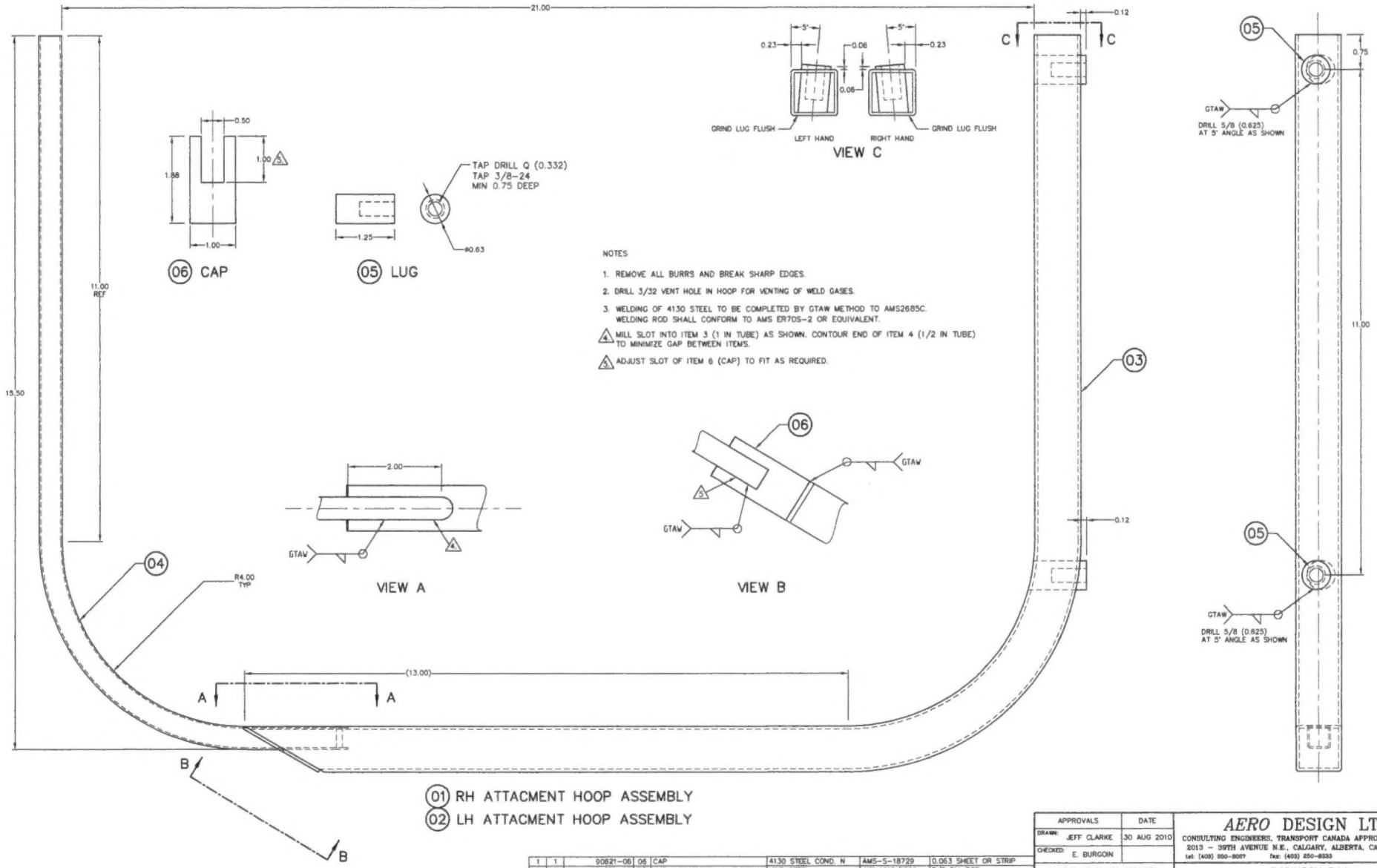

02 QTY	01 QTY	PART NO.	ITEM	DESCRIPTION	MATERIAL	MATERIAL SPEC	STOCK SIZE
1	1	90621-06	06	CAP	4130 STEEL COND. N	AMS-S-18729	0.063 SHEET OR STRIP
2	2	90621-04	05	LUG	MILD STEEL	AISI 1010/1020	5/8 DIA ROD
A/R	A/R		04	TUBE 1/2IN	4130 STEEL COND. N	MIL-T-6736	1/2 X 0.035 SQR TUBE
A/R	A/R		03	TUBE 1IN	4130 STEEL COND. N	MIL-T-6736	1 X 0.065 SQR TUBE
		90621-01-02	02	LH AFT ATTACHMENT HOOP ASSEMBLY			
		90621-01-01	01	RH AFT ATTACHMENT HOOP ASSEMBLY			

LIST OF MATERIALS

APPROVALS	DATE
DRAWN: JEFF CLARKE	30 AUG 2010
CHECKED: E. BURGOIN	

UNLESS OTHERWISE SPECIFIED DIMENSIONS ARE IN INCHES.
TOLERANCES ON:
DECIMALS
X.XXX ±0.010
X.XX ±0.03
X.X ±0.1
ANGLES ±1/2°

AERO DESIGN LTD.
CONSULTING ENGINEERS, TRANSPORT CANADA APPROVALS, DAR 200M
2013 – 39TH AVENUE N.E., CALGARY, ALBERTA, CANADA, T2E 6R7
tel: (403) 250-8087 fax: (403) 250-8333 www.aerodesign.ca

ROBINSON R44
QUICK RELEASE CARGO BASKET
AFT ATTACHMENT HOOP FABRICATION

SCALE 1 : 1	DWG. SIZE	DWG. NO.	REV.
SHEET 1 OF 1	A1	90621	0

REV.	DESCRIPTION OF CHANGE	INITIALS	DATE
0	INITIAL ISSUE		

NOTES

1. ENGRAVE 0.007 DEEP AS FOLLOWS:
   "QUICK RELEASE BASKET" – 0.125 HIGH
   "ROBINSON R44 SERIES" – 0.080 HIGH
   "S/N 90601-XX" – 0.080 HIGH
   "MAXIMUM PERMISSIBLE LOAD" – 0.125 HIGH
   "175 LBS/80 KG" – 0.200 HIGH
   "AERO DESIGN LTD." – 0.125 HIGH
   "CALGARY, ALBERTA, CANADA" – 0.080 HIGH
   "403-250-8027" – 0.080 HIGH

2. ON 90627-02: S/N IS 90602-XX.

(01) PLACARD

(02) PLACARD

PART NO.	ITEM	DESCRIPTION	MATERIAL	MATERIAL SPEC	STOCK SIZE
90627-02	02	PLACARD	6061-T6 ALUMINUM	QQ-A-250/11	0.063 SHEET
90627-01	01	PLACARD	6061-T6 ALUMINUM	QQ-A-250/11	0.063 SHEET

LIST OF MATERIALS

-- NOTICE --
THIS DRAWING CONTAINS INFORMATION AND DATA WHICH IS PROPRIETARY TO AERO DESIGN LTD. THIS DRAWING, OR ANY PORTION THEREOF, MAY NOT BE REPRODUCED, COPIED, OR DUPLICATED IN ANY MANNER, NOR USED FOR MANUFACTURING WITHOUT THE WRITTEN CONSENT OF AERO DESIGN LTD. BY ACCEPTING THIS DRAWING FOR REFERENCE, THE RECIPIENT AGREES TO HOLD AERO DESIGN LTD. HARMLESS FROM THE USE, OR MISUSE, OF THIS DRAWING OR THE INFORMATION CONTAINED THEREON.

APPROVALS		DATE
DRAWN:	JEFF CLARKE	13 SEPT 2010
CHECKED:	E. BURGOIN	

UNLESS OTHERWISE SPECIFIED DIMENSIONS ARE IN INCHES.
TOLERANCES ON:

DECIMALS		ANGLES
X.XXX	±0.010	±1/2°
X.XX	±0.03	
X.X	±0.1	

AERO DESIGN LTD.
CONSULTING ENGINEERS, TRANSPORT CANADA APPROVALS, DAR 290M
2013 – 39TH AVENUE N.E., CALGARY, ALBERTA, CANADA, T2E 6R7
tel: (403) 250-8027 fax: (403) 250-8333 www.aerodesign.ca

ROBINSON R44, R44 II
QUICK RELEASE CARGO BASKET
PLACARD

SCALE 1 : 1	DWG. SIZE	DWG. NO.	REV.
SHEET 1 OF 1	A1	90627	0